AIR CONDITIONER
Wall Mounted Type

OPERATION MANUAL



Contents

Safety Precautions 1
Indoor Unit Overview and Operations 2
Remote Controller Overview and Operations 3
Timer Operation 5
General Information on Operation 5
Care and Cleaning 6
Troubleshooting 8

Before using this product, read these instructions thoroughly and keep this manual for future reference.

Safety Precautions

To prevent personal injury, or property damage, read this section carefully before you use this product, and be sure to comply following safety precautions.
Incorrect operation due to failure to follow the instructions may cause harm or damage, the seriousness of which is classified as follows:

⚠ WARNING	⚠ CAUTION
This mark warns of death or serious injury.	**This mark warns of injury or damage to property.**

⃠ This mark denotes an action that is PROHIBITED.

❗ This mark denotes an action that is COMPULSORY.

⚠ WARNING

❗
- This product contains no user-serviceable parts. Always consult authorized service personnel for repairing, installation, and relocation of this product.
  Improper installation or handling will cause leakage, electric shock, or fire.
- In the event of a malfunction such as burning smell, immediately stop operation of the air conditioner, and disconnect all the power supply by turning off the electrical breaker or disconnecting the power plug. Then consult authorized service personnel.
- Take care not to damage the power supply cable.
  If it is damaged, it should only be replaced by authorized service personnel.
- In the event of refrigerant leakage, be sure to keep away from fire or any flammables, and consult authorized service personnel.
- In the event of a thunder storm or any prior sign of a lightning strike, turn off the air conditioner via the remote controller, and refrain from touching the product or the power source to prevent any electrical hazards.

❗
- This appliance is not intended for use by persons (including children) with reduced physical, sensory or mental capabilities, or lack of experience and knowledge, unless they have been given supervision or instruction concerning use of the appliance by a person responsible for their safety. Children should be supervised to ensure that they do not play with the appliance.

⃠
- Do not start or stop the operation of this product by inserting or pulling out the power plug, or by turning on or off the circuit breaker.
- Do not use flammable gases near this product.
- Do not expose yourself directly to the cooling airflow for many hours.
- Do not insert your fingers or any other objects into outlet port, open panel, or intake grille.
- Do not operate with wet hands.

⚠ CAUTION

❗
- Provide occasional ventilation during use.
- Always operate this product with air filters installed.
- Ensure that any electronic equipment is at least 1 m (40 in) away from either the indoor unit or outdoor unit.
- Disconnect all the power supply when you are not using this product for extended periods.
- After a long period of use, ensure to get the mounting of the indoor unit checked to prevent this product from falling down.
- The airflow direction and the room temperature should be carefully considered when you use this product in a room with infants, children, elderly or sick persons.

⃠
- Do not direct the airflow at fireplaces or heating apparatus.
- Do not block or cover the intake grille and the outlet port.
- Do not apply any heavy pressure to radiator fins.
- Do not climb on, place objects on, or hang objects from this product.

⃠
- Do not place any other electrical products or household belongings under this product.
  Dripping condensation from this product might get them wet, and may cause damage or malfunction of your property.
- Do not expose this product directly to water.
- Do not use this product for preservation of food, plants, animals, precision equipment, art work, or other objects. This may cause quality deterioration of those items.
- Do not expose animals or plants to the direct airflow.
- Do not drink the drainage from the air conditioner.
- Do not pull the power supply cable.
- Do not touch the aluminum fins of heat exchanger built-in this product to avoid personal injury when you maintain the unit.

- This product contains fluorinated greenhouse gases.

[Original instructions]

PART No. 9333003252-03

Indoor Unit Overview and Operations

1 Intake grille

Before starting operation, make sure that the intake grille has been shut completely. Incomplete closing might have an effect on the proper working or performance of the product.

2 MANUAL AUTO button

Use when you lost the remote controller or remote control malfunction occurs.

Status	Action	Mode or operation
In operation	Press more than 3 seconds.	Stop
Stopping	Press more than 3 seconds and less than 10 seconds.	AUTO
	Press more than 10 seconds. (Only for servicing.*)	Forced cooling
After cleaning	Press less than 3 seconds.	Filter indicator reset

*:To stop forced cooling, press this button or Start/Stop button on the remote controller.

3 Front panel

4 Vertical airflow direction louver

Each time you press “SET” button on the remote controller, the angle of the vertical airflow direction louver moves as follows:

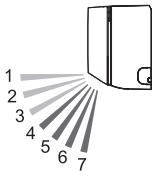

COOL or DRY mode	HEAT mode
1* ⇄ 2 ⇄ 3	⇄ 4 ⇄ 5 ⇄ 6 ⇄ 7*

*: Default setting in each mode.

- Do not adjust by hand.
- At the beginning of AUTO or HEAT mode, they may stay position 1 for a while for adjustment.
- If you set the angle to position 4–7 for more than 30 minutes in COOL or DRY mode, they automatically return to position 3.
  In COOL or DRY mode, if the angle is set to position 4–7 for many hours, condensation may be formed, and the drips may wet your property.

5 Power diffuser

In conjunction with movement of the vertical airflow direction louver, the angle of the power diffuser moves as follows:

Vertical airflow direction louver	1 ⇄ 2 ⇄ 3 ⇄ 4 ⇄ 5 ⇄ 6 ⇄ 7
Power diffuser	1 ⇄ 2 ⇄ 3 ⇄ 4

- In SWING operation, power diffuser does not move.

6 Drain hose

7 Remote control signal receiver

⚠ CAUTION

For appropriate signal transmission between remote controller and the indoor unit, keep the signal receiver away from following items:
- Direct sunlight or other strong light
- Flat-panel television screen

In rooms with instantaneous fluorescent lights, such as inverter type ones, the signal may not be transmitted properly. In such a case, consult the store that you purchased the product.

8 ECONOMY indicator (green)

Lights in ECONOMY operation and in 10 °C HEAT operation.

9 TIMER indicator (orange)

Lights in TIMER operation, and blinks slowly when the timer setting error is detected.
As for the timer setting error, refer to “Auto-restart function” on page 5.

10 OPERATION indicator (green)

Lights in normal operation, and blinks slowly in automatic defrosting operation.

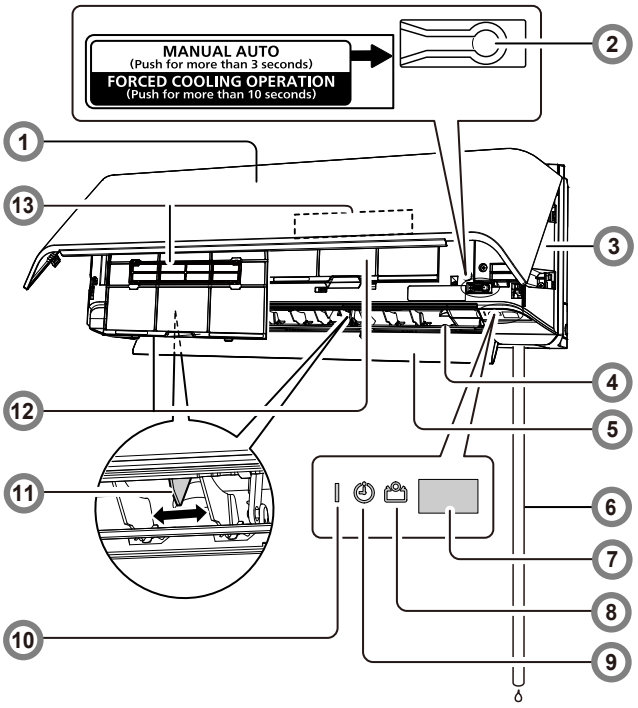

11 Horizontal airflow direction louvers

⚠ CAUTION

Before you adjust the horizontal airflow direction, make sure that the vertical airflow direction louver has been stopped completely.

Adjust two knobs by hand.

12 Air filter See page 6

13 Air cleaning filters See page 7

Purify or deodorize the air, and provide fresh airflow.

Indoor unit accessories

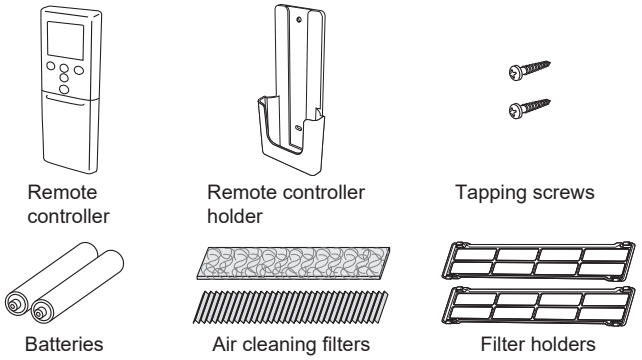

⚠ WARNING

Take care to prevent infants and young children from accidentally swallowing the batteries.

Remote controller holder installation

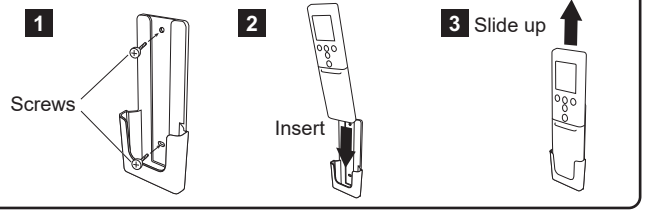

Remote Controller Overview and Operations

⚠ CAUTION

- To prevent malfunction or damage of the remote controller:
  - Place remote controller at where will not be exposed to direct sunlight or excessive heat.
  - Remove batteries if the product is not going to be used for an extended period.
  - Exhausted batteries must be removed immediately, and be disposed according to the local laws and regulations of your region.
- If leaking battery fluid comes in contact with your skin, eyes, or mouth, immediately rinse with plenty of clean water, and consult your physician.
- Obstacles such as a curtain or wall between the remote controller and the indoor unit may affect the appropriate signal transmission.
- Do not apply strong shocks to the remote controller.
- Do not pour water on the remote controller.
- Do not attempt to recharge dry batteries.
- Do not use dry batteries that has been recharged.

Inserting batteries (R03/LR03/AAA × 2)

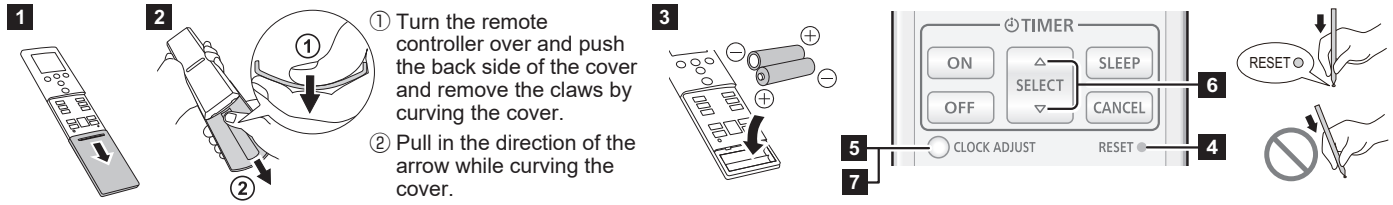

4 Press “RESET” as shown in the figure above.
Use the tip of a ballpoint pen or other small object.

5 Press “CLOCK ADJUST” to start clock setting.

6 Press “SELECT (△▽)” to set the clock.
Press the buttons to change the clock by a minute.
Press and hold the buttons to change the clock by 10 minutes.
* To switch the time indicator (12-hour ⇔ 24-hour), press “TEMP. (∧ ∨)”.

7 Press “CLOCK ADJUST” to complete the setting.

8 Install and close the cover.

NOTES:
- Use specified type of batteries only.
- Do not mix different types or new and used batteries together.
- Batteries can be used about 1 year in ordinary use.
- If the remote control range noticeably shortens, replace the batteries, and press “RESET” as shown in the figure above.

You can quickly start the operation with following 3 steps:

① Start/Stop button

② MODE button ＊

Switches operation mode in following order.

AUTO → COOL → DRY → FAN → HEAT

Notes in HEAT mode:
- At the beginning of the operation, the indoor unit operates at very low fan speed for about 3–5 minutes for preparation, and then switches to the selected fan speed.
- Automatic defrosting operation overrides the heating operation when it is necessary.

Note in COOL mode:

Indoor unit fan may stop from time to time to perform indoor-unit-fan control for energy saving that enables power-saving operation by stopping the rotation of the indoor unit fan when the outdoor unit is stopped.

In initial setting, this function is activated.
To inactivate the function, consult the installer or authorized service personnel.

Even if the setting is changed, if the fan speed is set to “AUTO” in COOL or DRY mode, this function still works to suppress the diffusion of circulated indoor humidity.

③ SET TEMP. (temperature) buttons ＊

Set desired temperature.
In COOL/DRY mode, the value needs to be set at lower temperature than current room temperature, and in HEAT mode, the value needs to be set at higher temperature than current room temperature. Otherwise, corresponding operation mode does not start to work.

Temperature setting range	
AUTO/COOL/DRY	18–30 °C
HEAT	16–30 °C

*:Temperature control is not available in FAN mode.

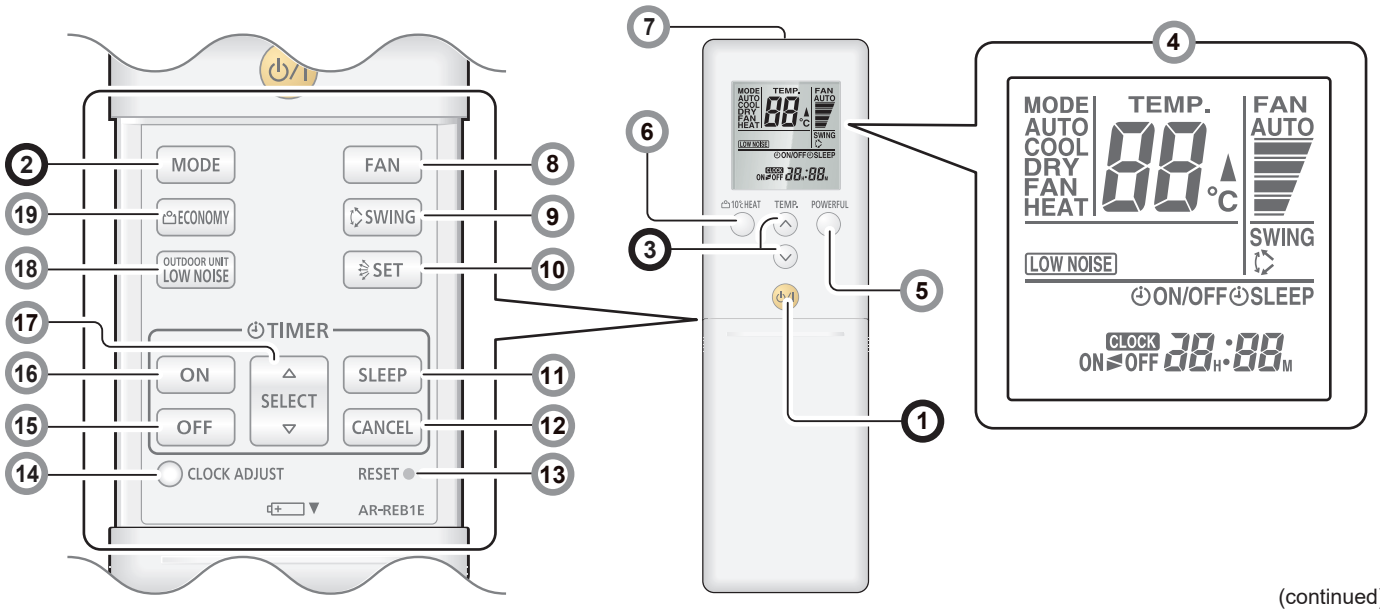

(continued)

Remote Controller Overview and Operations

4 Remote controller display

In this section, all the possible indicators are displayed for description. In actual operation, the display is linked with the button operation, and only shows the necessary indicators for each setting.

5 POWERFUL button

The product will operate at maximum power, which is convenient when you want to quickly cool down or warm up the room.
When you press the button to start the POWERFUL operation, the indoor unit emits 3 short beeps.

POWERFUL operation is automatically turned off in the following situations:

- Adjusted room temperature reached to the defined temperature in temperature setting in COOL, DRY, or HEAT mode.
- 20 minutes have passed after finishing the POWERFUL operation mode setting.

It is not turned off automatically during setting of the POWERFUL operation.

Notes:

- The airflow direction and the fan speed are controlled automatically.
- This operation cannot be performed simultaneously with ECONOMY operation.

To return to normal operation, press the button again. Then the indoor unit emits 2 short beeps.

6 10 °C HEAT button ✳

Starts 10 °C HEAT operation that maintains the room temperature at 10 °C so as to prevent the room temperature to drop too low.
When you press the button to start the 10 °C HEAT operation, the indoor unit emits 2 short beeps and the ECONOMY indicator (green) turns on.

Notes:

- In 10 °C HEAT operation mode, only vertical airflow direction can be adjusted by using SET button.
- HEAT mode will not be performed if the room temperature is warm enough.
- In multi-type air conditioning system, if other indoor unit is in HEAT mode, the temperature of the room where 10 °C HEAT operation is performed will rise. When performing 10 °C HEAT operation, all the indoor units should be run in 10 °C HEAT operation mode.

To return to normal operation, press the Start/Stop button.
The ECONOMY indicator turns off.

7 Signal transmitter

Aim to signal receiver of the indoor unit properly.

- Signal transmit indicator ▲ on the remote controller display shows that signal from the remote controller is being transmitted.
- Operating range is approximately 7 m.
- You will hear a beep if the transmitted signal has been sent properly. If there is no beep, press the button on the remote controller again.

8 FAN button ✳ ▮

Controls the fan speed.



- When AUTO is selected, the fan speed is automatically adjusted according to the operation mode.

9 SWING button ✳ ▮

Starts or stops automatic swing of the vertical airflow direction louver.

- Each time you press the button, the vertical airflow direction louver swings as follows:

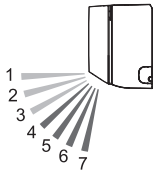

COOL, DRY, or FAN mode	HEAT or FAN mode
1 ⇄ 2 ⇄ 3	4 ⇄ 5 ⇄ 6 ⇄ 7

Notes:

- SWING operation may stop temporarily when the fan in the unit is rotating at very low speed or stopping.
- In FAN mode, either of swing direction 1 ↔ 3 or 4 ↔ 7 is performed in accordance with the vertical airflow direction previously set before you start the SWING operation.

10 SET button ▮

Adjusts the vertical airflow direction.

11 SLEEP timer button See page 5 ✳

Activates the SLEEP timer that helps you to fall asleep comfortably with gradual temperature control.

12 Timer CANCEL button ▮

Cancels the set timer.

13 RESET button

When you press the “RESET” button, press it gently by using the tip of a ballpoint pen or other small object in correct direction as shown in this figure.



14 CLOCK ADJUST button See page 3

Cancels the set timer.

15 OFF timer button See page 5 ✳ ▮

Activates the OFF timer.

16 ON timer button See page 5 ✳ ▮

Activates the ON timer.

17 SELECT button

Used for adjusting the clock or timer.

18 OUTDOOR UNIT LOW NOISE button See page 3 ✳

Starts or stops OUTDOOR UNIT LOW NOISE operation that lowers noise generated from the outdoor unit by cutting down the rotation number of the compressor, and suppressing the fan speed till they are sufficiently reduced.
Once the operation is set, the operation setting is preserved until you press this button again to stop the operation, even if the indoor unit operation is stopped.
OUTDOOR UNIT LOW NOISE indicator LOW NOISE on the remote controller display shows that the unit is in OUTDOOR UNIT LOW NOISE mode.

Notes:

- This operation cannot be performed simultaneously with following modes:
  FAN mode, DRY mode, POWERFUL operation mode
- This operation cannot be performed on a multi-type air conditioner. If this mode is unintentionally set on a multi-type air conditioner, cancel the setting by pressing the button. Otherwise, the signal of the remote controller cannot be transmitted properly.

19 ECONOMY button ▮

Starts or stops ECONOMY operation that saves more electricity consumption than the other operations with a conservative adjustment of the room temperature.
When you press the button, the ECONOMY indicator on the indoor unit turns on.

- In COOL or DRY mode, the room temperature will be adjusted at a few degree higher than the defined temperature.
  In HEAT mode, the room temperature will be adjusted at a few degree lower than the defined temperature.
- Especially in COOL or DRY mode, you can have improved dehumidification without significantly lowering the room temperature.

Notes:

- In COOL, HEAT, or DRY mode, the maximum output of this operation is approximately 70 % of usual air conditioning operation.
- This operation cannot be performed during temperature monitoring by AUTO mode.
- In multi-type air conditioning system, ECONOMY operation is performed only on the indoor unit whose “ECONOMY” button on the corresponding remote controller is pressed.

✳: The setting must be done while the indicator stays solid.
▮: The button is controllable only when the air conditioner is on.

Timer Operation

Note for timer settings:

Any interruption of the power supply, such as a blackout or cutting off of a circuit breaker, makes the set internal clock go wrong.
In such a case, the TIMER indicator on the indoor unit blinks, and you need to readjust the setting.

ON timer or OFF timer

1. Turn on the indoor unit by pressing the Start/Stop button.
   OPERATION indicator on the indoor unit turns on.
   If the indoor unit is already operating, skip this step.
2. Press the “ON” timer button or the “OFF” timer button.
   Clock indicator on the remote controller display starts blinking, and TIMER indicator on the indoor unit turns on.
3. Adjust the time by pressing the “SELECT” button within about 5 seconds, while the clock indicator is blinking.
   (About 5 seconds later, the remote controller display returns to standby screen.)

To cancel the timer and return to the normal operation, press the “CANCEL” button.
To redo the timer setting, perform step 2 and 3.

Program timer (combined use of the ON timer and the OFF timer)

You can set an integrated ON–OFF or OFF–ON timer.
Either of the timer whose configured starting time is closer to the current time works first, and the order of timer operation is displayed as follows:

Timer	Indicator on remote controller display
ON–OFF timer	ON►OFF
OFF–ON timer	ON◄OFF

The timer that is set later starts counting down after the counting down of the preceding timer is finished.

Notes:

- If you change the setting value for the timer after the program timer is set, the counting down of the timer will be reset at that moment.
- Time setting for each combination should be within a span of 24 hours.

SLEEP timer

1. Press the “SLEEP” timer button to activate the SLEEP timer.
   OPERATION indicator and TIMER indicator on the indoor unit turns on.
2. Adjust the time by pressing the “SELECT” button within about 5 seconds, while the clock indicator is blinking.
   (About 5 seconds later, the remote controller display returns to standby screen.)
   Each time you press the button, the time changes as follows:

0.5 (30 min.) ↔ 1.0 ↔ 2.0 ↔ 3.0 ↔ 5.0 ↔ 7.0 ↔ 9.0 hours

To repeat the timer, press the “SLEEP” timer button when ⏻SLEEP indicator is not displayed on the remote controller display.

To help you to fall asleep comfortably and prevent excessive warming or cooling in sleep, the SLEEP timer controls the temperature setting automatically in accordance with the set time shown as follows. The air conditioner completely turns off after the set time has elapsed.

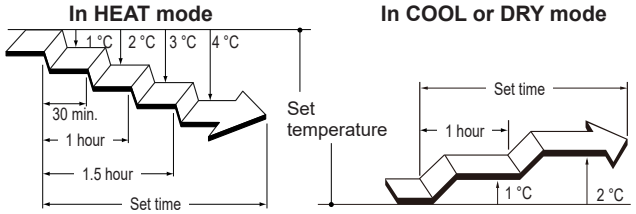

General Information on Operation

Automatic defrosting operation

When outdoor temperature is very low with high humidity, frost may form on the outdoor unit during the heating operation, and it could reduce the operating performance of the product.
For frost protection, a microcomputer-controlled automatic defrost function is equipped in this air conditioner.
If frost forms, the air conditioner will temporarily stop, and defrost circuit will operate briefly (maximum of 15 minutes.)
OPERATION indicator on the indoor unit blinks during this operation.
If frost forms on the outdoor unit after the heating operation, the outdoor unit will stop automatically after it operates for a few minutes. Then the automatic defrosting operation starts.

Auto-restart function

In event of power interruption such as a blackout, the air conditioner stops once. But it restarts automatically and performs previous operation when the power supply is resumed.

If any power interruption occurs after the timer is set, counting down of the timer will be reset.
After the power supply is resumed, the TIMER indicator on the indoor unit blinks to notify you that there has been a timer fault.
In such a case, reset the timer for your opportune time.

Malfunctions caused by other electrical devices:

Use of other electrical appliances such as an electric shaver or nearby use of a wireless radio transmitter may cause the malfunction of the air conditioner.
If you encounter such a malfunction, turn off the circuit breaker once. Then turn it on again, and resume operation by using the remote controller.

Multi-type air conditioner

This indoor unit can be connected to a multi-type outdoor unit, and used as a multi-type air conditioner that allows multiple indoor units to be operated in multiple locations.
The indoor units may be operated simultaneously, in accordance with their respective output.

Simultaneous use of multiple indoor units

- If 2 or more indoor units are operated simultaneously, the heating and cooling efficiency will be less than the efficiency in single use of the indoor unit.
  Combined use of other auxiliary heating or cooling apparatus is recommended.
- Following combinations cannot be performed when multiple indoor units are operated:
  - HEAT mode and COOL mode (or DRY mode)
  - HEAT mode and FAN mode
  The indoor unit operated afterward stops and the OPERATION indicator flashes.
- The operating mode (HEAT, COOL, and DRY) of the outdoor unit is determined by the operating mode of the indoor unit that is operated first. If the indoor unit is started in FAN mode, the operating mode of the outdoor unit cannot be determined.
  For example, if indoor unit (A) is started in FAN mode and then indoor unit (B) is operated in HEAT mode, indoor unit (A) will temporarily start operation in FAN mode but when indoor unit (B) started operation in HEAT mode, the OPERATION indicator (green) on the indoor unit (A) will begin to blink (1 second on, 1 second off) and go into standby mode. Indoor unit (B) will continue to operate in HEAT mode.
- In HEAT mode, the top of the indoor unit may become warm by emitted heat of circulated coolant through the indoor unit, even if the unit operation is stopped. This is not a malfunction.

Care and Cleaning

⚠ CAUTION

- Before cleaning this product, be sure to turn it off and disconnect all the power supply.
- Before starting operation, make sure that the intake grille has been shut completely. Incomplete closing of the intake grille might have an effect on the proper working or performance of the air conditioner.

- Do not touch the aluminum fins of heat exchanger built-in the indoor unit to avoid personal injury when you maintain the unit.
- Do not expose the indoor unit to liquid insecticides or hair sprays.
- Do not stand on slippery, uneven or unstable surfaces when you maintain the unit.

Daily care

When cleaning the indoor unit body, mind the following:

- Do not use water hotter than 40 °C.
- Do not use scouring cleanser, volatile solvents such as benzene or thinner.
- Wipe the unit gently by using soft cloth.

Cleaning the intake grille

1. Open the intake grille in direction of the arrow **a**. While gently pressing the left and right mounting shafts of the intake grille outward **b**, remove the intake grille in direction of the arrow **c**.

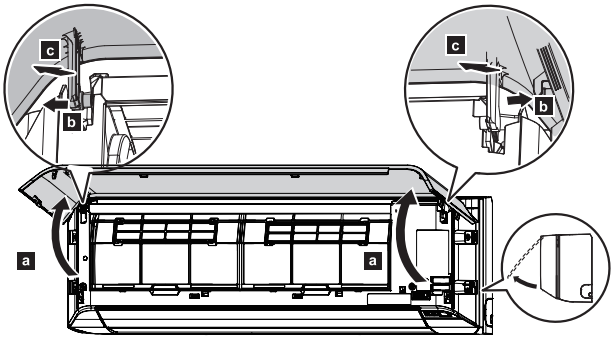

2. Wash the intake grille gently with water or wipe it gently with a soft cloth moisten with warm water.
   Then wipe it with a dry and soft cloth.
3. While holding the grille horizontal, set the left and right mounting shafts into the pillow blocks at the top of the panel **a**. To latch each shaft properly, insert the shaft until it snaps.
   Then close the intake grille **b**.

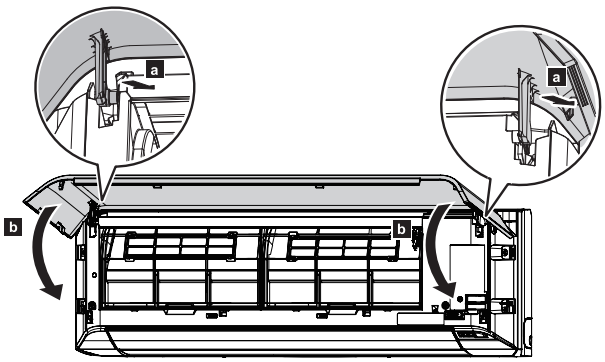

4. Press 4 places on the intake grille to close it completely.

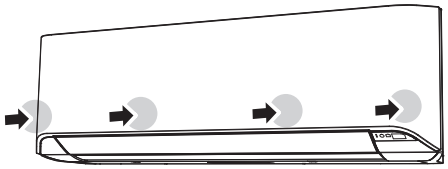

Cleaning the air filters

Mind that you have a periodical cleaning of the air filters to prevent reducing the operation efficiency of the product.

Using of clogged air filter with dust will lower the product performance, and may cause airflow reduction or increase of operating noise.

Clean the air filters once every 2 weeks under normal use.

1. Open the intake grille.
   (Refer to **a** of step 1 in “Cleaning the intake grille”.)
2. While holding the intake grille with your hand, pull up the handle **a** of the filter in direction of the arrow and release the 2 claws **b**. Then pull the filter out with gently sliding it downward **c**.

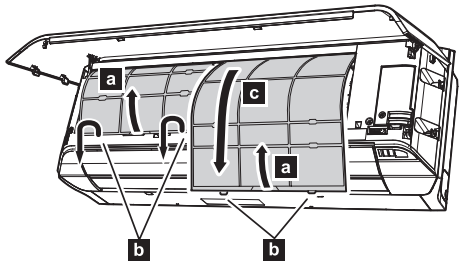

3. Filter holder and air cleaning filter are attached on the rear side of the air filter. Remove them from the air filter by unlatching each corner of the filter holder **d**.

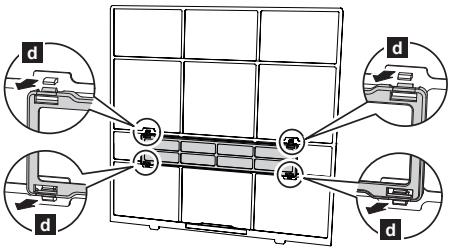

4. Remove dust by using a vacuum cleaner or by washing the filter. When you wash the filter, use neutral household detergent and warm water.
   After rinse the filter well, dry it thoroughly in a shaded place before you reinstall it.
5. Attach the air cleaning filter and the filter holder to each air filter.
6. Attach the air filter with aligning both side of the filter with the front panel, and push in the filter fully.

   Note:

   Make sure that 2 claws are firmly snapped to the guide holes on the panel.
7. Close the intake grille firmly.
   (Refer to step 4 in “Cleaning the intake grille”.)

Care and Cleaning

Replacing the air cleaning filter

1. Remove the air filter.
2. Release 2 latches **a** of the filter holder, and turn over the holder in direction of arrow **b**.
   Remove the soiled air cleaning filter **c**.

   Note:

   Air cleaning filter is attached on each air filter.

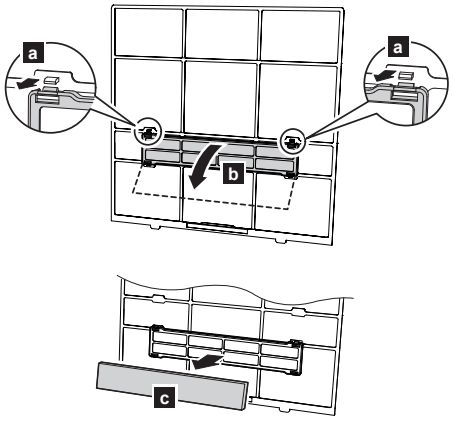

3. Attach new or maintained air cleaning filter **d** to the filter holder.
   New air cleaning filter can be attached to either of the right holder or the left holder.

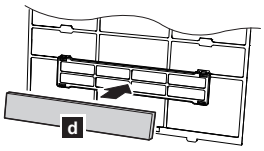

4. Latch 2 corners of the filter holder **e** to the air filter firmly.

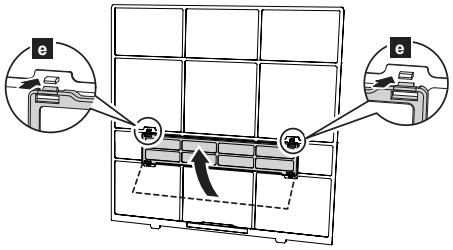

5. Reinstall the air filter. (Refer to step 6 in “Cleaning the air filters”.)
6. Close the intake grille firmly.
   (Refer to step 4 in “Cleaning the intake grille”.)

Following 2 types of air cleaning filters are used in this product.
When you replace them, purchase dedicated air cleaning filters for this product.

APPLE-CATECHIN FILTER: UTR-FA16



(1 sheet)

With using static electricity, purifies the air by removing fine particles or dust such as tobacco smoke or plant pollen.

- This filter is disposable. Do not wash or reuse it.
- Once you open the package, use it as soon as possible. The cleaning effect is reduced if the filter is left the package opened.
- Replace the filter once every 3 months under normal use.
- With setting the fan speed high, the air cleaning effect increases.

ION DEODORIZATION FILTER (light blue): UTR-FA16-2

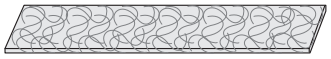

(Light blue, 1 sheet)

Contained super micro-ceramic particles produce negative air ions, that is considered to have deodorizing effect, absorb and reduce room smell.

- To maintain the deodorizing effect, clean the filter once every 3 months as follows:
  1. Remove the ion deodorization filter.
  2. Flush the filter with high-pressure hot water until the surface of the filter is covered with water.
  3. Wash the filter gently with diluent neutral detergent. Do not wash it by wringing or rubbing to prevent reducing the deodorizing effect by damage.
  4. Rinse the filter well with water flow.
  5. Dry the filter thoroughly in shaded place.
  6. Reinstall the ion deodorization filter to the indoor unit.
- Replace the filter once every 3 years under normal use.

After extended non-use of the unit

If you have shut down the indoor unit for 1 month or more, perform the FAN operation for half a day to dry the internal parts thoroughly before you perform normal operation.

Additional inspection

After long period of use, accumulated dust inside the indoor unit may reduce the product performance even if you have maintained the unit with instructed daily care or cleaning procedures written in this manual.

In such a case, the product inspection is recommended.

For more information, consult authorized service personnel.

Filter Indicator Reset (Special setting)

- This function can be used if set correctly during installation.
  Please consult authorized service personnel in order to use this function.
- Clean the air filter when the indicator lamp show the following;

ECONOMY indicator	Flashes 3 times, at intervals of 21 seconds

After cleaning, reset the filter indicator by pushing the MANUAL AUTO button on the indoor unit for 3 seconds or less.

Troubleshooting

⚠ WARNING

In following events, immediately stop operation of the air conditioner, and disconnect all the power supply by turning off the electrical breaker or disconnect the power plug. Then consult your dealer or authorized service personnel.
As long as the unit is connected to the power supply, it is not insulated from the power supply even if the unit is turned off.
- Unit smells of something burning or emits smoke
- Water leaks from the unit

Following symptoms do not indicate the product malfunction, but they are normal functions or characteristics of this product.

Symptom	Cause	See page
Operation is delayed after restart.	To prevent blowout of the fuse, the compressor will not operate during the protection circuit is working for about 3 minutes after sudden OFF→ON operation of the power supply.	–
Noise is heard.	• During the operation or immediately after stopping the air conditioner, refrigerant flowing sound may be heard. And it is particularly noticeable for 2–3 minutes after starting operation. • During the operation, a slight squeaking sound produced by the minute expansion and contraction of the front panel caused by temperature change may be heard.	–
	During heating operation, a sizzling sound produced by the automatic defrosting operation may be heard.	5
Smell coming from the unit.	Absorbed room smell generated from interior textile, furniture, or cigarette smoke into the air conditioner may be emitted.	–
Mist or steam is emitted from the unit.	In COOL or DRY mode, a thin mist generated by condensation formed with sudden cooling process may be emitted.	–
	During heating operation, the fan built-in the outdoor unit may stops and rising steam generated by the automatic defrosting operation may be seen.	5
Airflow is weak or stops.	• Immediately after the heating operation is started, the fan speed stays temporarily very low to warm up the internal parts of the unit. • In HEAT mode, the outdoor unit stops and the indoor unit operates at very low fan speed if the room temperature rises above the set temperature.	–
	In HEAT mode, the indoor unit temporarily stops for maximum of 15 minutes to perform the automatic defrosting operation while the OPERATION indicator is flashing.	5
	In DRY mode, the indoor unit operates at low fan speed to adjust the room humidity, and may stop from time to time.	–
	When the fan speed is set to “QUIET”, the fan rotates at very low speed and the airflow is reduced.	–
	In COOL mode, the indoor unit fan may stop from time to time when the outdoor unit is stopped.	3
	When monitoring operation is performed in AUTO mode, the fan rotates at very low speed.	–
	When multiple units are operated in following combination of different operation modes in a multi-type air conditioning system, the indoor unit operated afterward stops and the OPERATION indicator flashes. • HEAT mode and COOL mode (or DRY mode) • HEAT mode and FAN mode	5
Outdoor unit emits water.	During heating operation, the outdoor unit may emit water generated by the automatic defrosting operation.	–

When the filter sign is set, the LED lamp may flash. In this case, please refer to the “Filter Indicator Reset (Special setting)”.

Before you call for or request servicing, troubleshoot a problem by performing following checks:

Symptom	Diagnostic	See page
Does not operate at all.	☐ Has the circuit breaker been turned off? ☐ Has there been a power outage? ☐ Has a fuse blown out or the circuit breaker been tripped?	–
	☐ Is the timer operating?	5
Poor cooling or heating performance.	☐ Is the air filter dirty?	6
	☐ Is the intake grille or outlet port of indoor unit blocked?	–
	☐ Is the room temperature adjusted appropriately?	3
	☐ Is a window or door left opened? ☐ Is direct or strong sunlight shinning into the room in cooling operation? ☐ Are there other heating apparatus or computers operating, or too many people in the room in cooling operation?	–
	☐ Is the fan speed set to “QUIET”? When the fan speed setting is set to “QUIET”, noise reduction is prioritized and the air-conditioning performance may become lower. If the volume of provided airflow is not agreeable to your preference, set the fan speed to “LOW” or higher fan speed.	4
The unit operates differently from the remote controller setting.	☐ Are the batteries used in the remote controller exhausted? ☐ Are the batteries used in the remote controller loaded properly?	3

Immediately stop operation and turn off the electrical breaker in following cases. Then consult authorized service personnel.
- The problem persists even if you perform these checks or diagnostics.
- The OPERATION indicator and TIMER indicator blink while the ECONOMY indicator is blinking fast.